# TECHNICAL SPECIFICATIONS

## 70-125
CRUSHER MACHINE

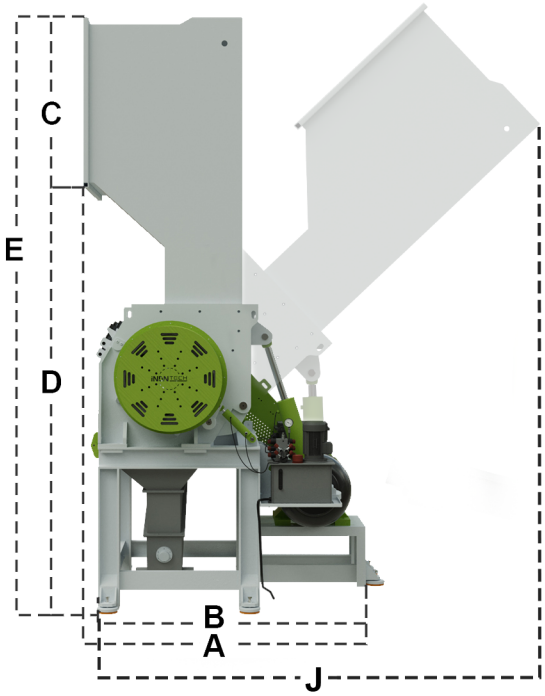


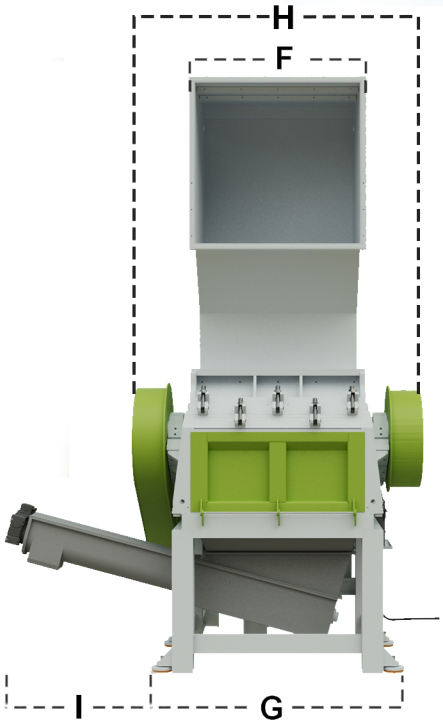

| Model | Dimension (mm) |
|---|---|
| A | 2270 |
| B | 2150 |
| C | 880 |
| D | 3343 |
| E | 4225 |
| F | 1745 |
| G | 1365 |
| H | 2267 |
| I | 1559 |
| J | 3305 |

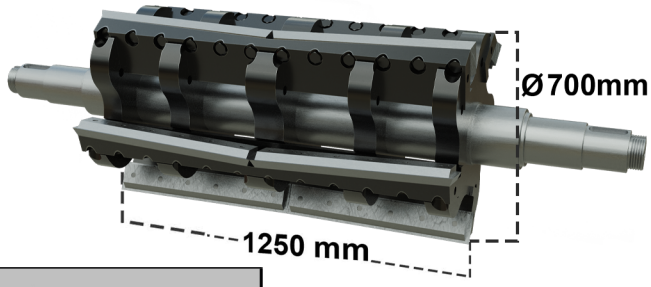


| | |
|---|---|
| Crusher Model | : 70.125 |
| Construction & Body Material | : DIN 1.0038 - AISI St37 |
| Body Armor Material (Inside) | : HARDOX 450-500 |
| Rotor Material | : DIN 1.0501 - AISI 1040 |
| Blade Material | : DIN 1.2379 - AISI D2 (56-58 HRC) |
| Fixed Blade Quantity | : 4 |
| Rotor Blade Quantity | : 10 |
| Screen Hole Size | : Ø10-12mm (chanegable) |
| Rotor Diameter | : 700 mm |
| Rotor Length | : 1250 mm |
| Rotor Speed | : 420-520 rpm |
| Motor Power | : 110/132 kW / 1500 rpm |
| Motor Brand | : OMEGA / GAMAK / ELK |
| Bearing Brand | : SKF / NACHI / INA / TIMKEN / NSK / NTN / ORS |
| Hydraulic Unit Motor Power | : 1,5 kW |
| Output Screw Conveyor | : Stainless Steel ( Standard 3-4mt length) |
| Output Screw Motor Power | : 3 kW (depends on length) |
| Water Consumpiton | : 2-6 m3/h (depends on dirty / pollution) |
| Total Power | : 114,5 kW |
| Weight | : 8 ton |
| *Machine height and feed hopper dimensions can be changed according to the installation area. | |

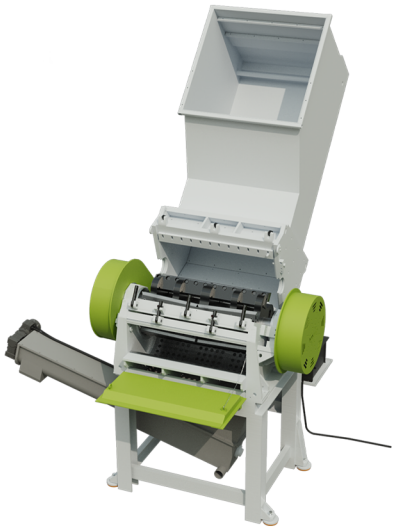

WEB SITE

**Address:**
Velimeşe OSB Bölgesi Mah. 227. Sok No.17/3 Ergene – Tekirdağ TÜRKİYE

**Contact:**
+90 (282) 674 50 22

**Sales Team:**
+90 (555) 979 97 61
+90 (535) 545 77 43

**Fax:**
+90 (282) 674 35 38

**E-Mail:** info@inanplastics.com / sales@inanplastics.com